Item # _____
Qty # _____
Model # _____
Project # _____

DUKERS
Quality Commercial Refrigeration

1 YEAR WARRANTY
PARTS & LABOR

GRIDDLE
DCGMA48

Oil Tray

PRODUCT DESCRIPTION

- Stainless steel exterior and interior.
- 30,000 BTU Burners per 12" section with standby pilots.
- Independent manual controls every 12".
- Heavy duty 1" thick polished steel griddle plate.
- Each griddle is shipped with Standard Natural Gas, LP conversion kit.
- Adjustable stainless steel legs come standard, allowing the equipment height to be adjusted from a low of 15 1/4" to a maximum of 17 5/8".
- Full length seamless drip pan, easy to remove and clean.

HIGH QUALITY STAINLESS STEEL & ROBUST DESIGN

GRIDDLE MODEL	DIMENSION		
	Width	Depth	Height
DCGMA48	48 in	33 1/2 in	15 1/4 in

* All measures are presented in Inches

DUKERS
Los Angeles | San Francisco | Dallas
Houston | Florida | Chicago | New Jersey

1-800-931-8628
info@dukersusa.com
www.DukersUSA.com

DETAILS & SPECIFICATIONS

GRIDDLE DCGMA48

Front View

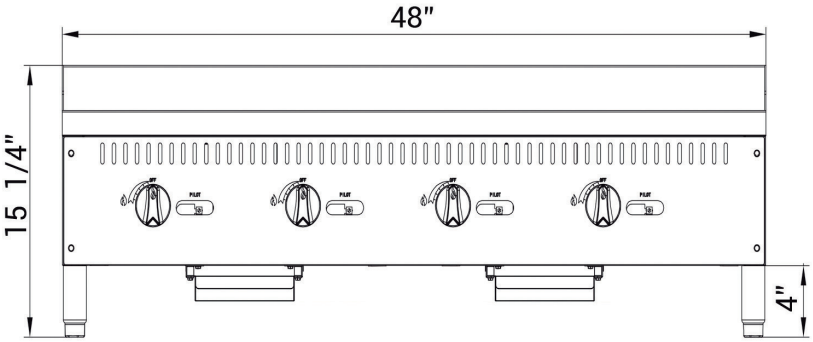

DCGMA48	
GAS SOURCE	NG/Propane
WORK AREA	47.83x24.02in
BURNER	4 count
SINGLE BURNER	30000 BTU/H
COMBINED	120000 BTU/H
GAS PRESSURE	NG: 4 "WC Propane: 10 "WC
NOZZLE	NG: 37# Propane: 51#
CONTAINER FITMENT	110

Top View

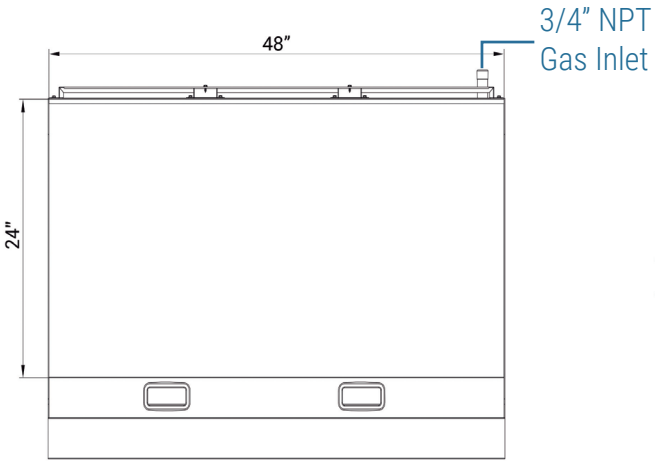

Side View

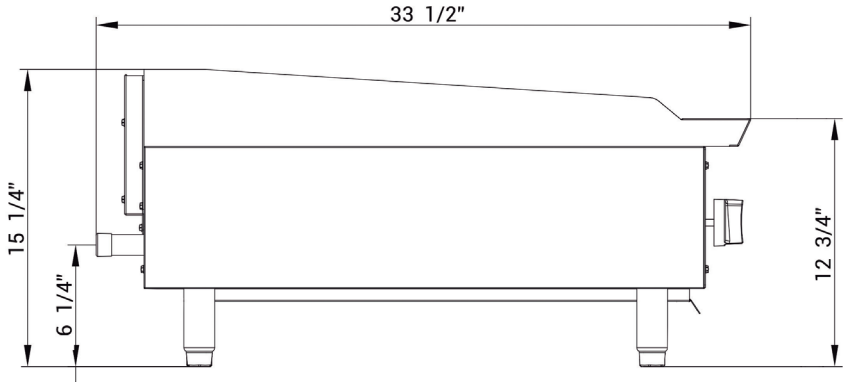

PROUD MEMBER CFESA Commercial Food Equipment Service Association

SANITATION

C US

Model	Packaging Dimensions (inches)			Net Weight (lbs)	Ship Weight (lbs)
	W	D	H		
DCGMA48	50 1/4"	36 1/4"	20 1/2"	515.88	555.57

DUKERS

Los Angeles | San Francisco | Dallas
Houston | Florida | Chicago | New Jersey

1-800-931-8628

info@dukersusa.com

www.DukersUSA.com