DUKERS
Quality Commercial Refrigeration

3 YEARS PARTS & LABOR
PREMIUM
WARRANTY
5 YEAR COMPRESSOR

SALAD PREP TABLE

DSP36-15M-D2

2-Drawers / Mega Top

TECHNICAL SPECIFICATIONS

Voltage/Frequency	115V/60Hz
Refrigerant	R290
Type of Defrost	Automatic
Interial Material	Stainless Steel
Exterior Material	Stainless Steel
Temperature Range °F	33 ~ 41°F
Compressor Power (HP)	1/5
Nema Config.	NEMA5-15P

PRODUCT FEATURES

- The compressor is mounted in the back and placed in the coolest possible area; this makes it easily accessible for servicing.
- Digital temperature controls with LED display for precise adjustment and automatic defrosting system.
- Temperatures in the cabinet range from 33 to 41 degrees Fahrenheit.
- Higher Resistance to dust, high quality condenser.
- R290 Natural Refrigerant promotes faster cool down and efficient energy consumption.
- Drawers hold 6" deep food pans (not included) with heavy-duty, high-capacity slide rails.
- Top prep rail comes equipped with 6" deep 1/6 plastic pans.
- 6" casters with lock for easy mobility.

HIGH QUALITY STAINLESS STEEL & ROBUST DESIGN

DUKERS
Los Angeles | San Francisco | Dallas
Houston | Florida | Chicago | New Jersey

1-800-931-8628
info@dukersusa.com
www.DukersUSA.com

DETAILS & SPECIFICATIONS

SALAD PREP TABLE DSP36-15M-D2

Front View

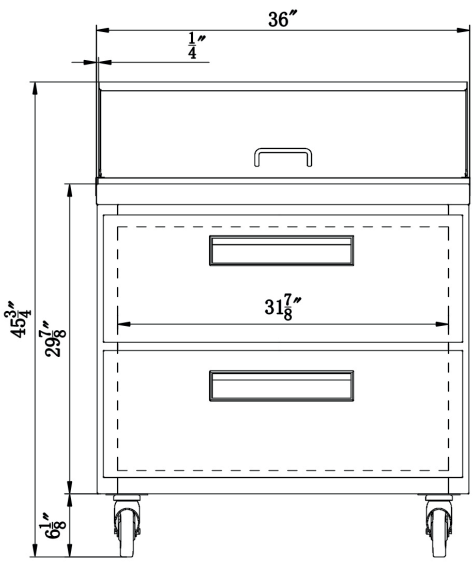

Side View

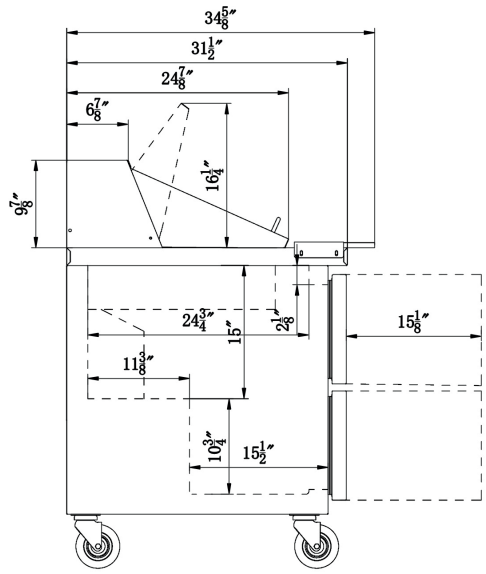

Upper drawer

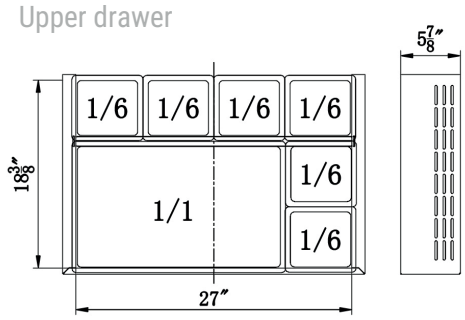

Lower drawer

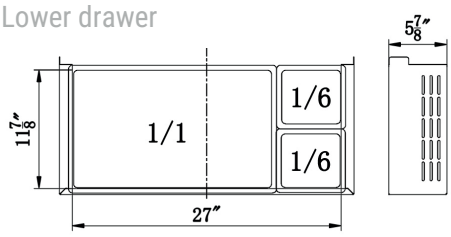

MODEL DSP36-15M-D2	
Cutting Board Size	36 x 9
Rated Voltage	115V
Rated Frequency	60Hz
Total Input Power	280W
Total Current	2.4A
Total Capacity	8.98 cu ft
Climatic Category	4-5
Protection Type	I
Design Pressure High Side	300 PSIG
Design Pressure Low Side	150 PSIG
Insulation Blowing Gas	C-Pentane
Refrigerant	R290/3.17oz

MODEL	EXTERNAL DIMENSION WXDXH (INCHES)	PACKAGING DIMENSION WXDXH (INCHES)	PRODUCT NET WEIGHT	# OF DRAWERS	40HQ CONTAINER CERT.
DSP36-15M-D2	36 x 31 7/8 x 45 3/4	40 1/4 x 35 7/8 x 48 3/8	215 lbs	2	52

Important: a) Width does not include 1/5" on each side for cutting board pins. b) Depth does not include 1" for rear bumpers. c) Height does include casters.

NATURAL REFRIGERANT · PROUD MEMBER CFESA · AutoQuotes · Intertek · Intertek · 115/60/1 NEMA-5-15P

DUKERS
Los Angeles | San Francisco | Dallas
Houston | Florida | Chicago | New Jersey

1-800-931-8628
info@dukersusa.com
www.DukersUSA.com